Issue: December 2016

Art.-No.: 10022363

Operating Instructions

EasyPull

www.amf-bruns.de

Foreword

Dear reader,

these Operating Instructions serve to provide all information required for the safe use of the EasyPull.

The EasyPull is designed and constructed in accordance with state of the art technology and recognised safety standards. Persons and materials can however be endangered, as not all danger areas can be eliminated if the functional capability is to be maintained. Accidents caused by these dangers can however be prevented by strictly observing these Operating Instructions. Over and above this, the operational efficiency of your EasyPull can be used to the full and unnecessary faults can be prevented.

After reading these Operating Instructions for the first time, keep them in a safe place for future reference over the entire lifetime of the EasyPull. If you sell the EasyPull, hand these Operating Instructions over to the new owner.

All details, figures and dimensions contained in these Operating Instructions are non-binding. They cannot be used as the basis for any claims whatsoever.

This document must not be reproduced or duplicated, in full or in part, without the prior, written permission of the manufacturer.

The EasyPull must be converted or modified in any way, without seeking the prior, written permission of the manufacturer. Unauthorised modifications will render the manufacturer's liability and guarantee null and void.

Use only original spare parts or spare parts which have been approved of by the manufacturer. If spare parts other than these are used, this can have a negative effect on the specified characteristics, the functionality and safety of the EasyPull. The use of any other parts will therefore render the liability for resultant damage null and void.

Contact our customer services department to order spare parts or accessories (see Chapter 12, page 47).

Explanation of symbols and signs

To improve understanding, the following conventions should be met for these Operating Instructions:

1.

The following conventions are used to highlight important information:

DANGER!

- warns of a situation of immediate danger, which will lead to serious or fatal injuries, if not avoided.

WARNING!

- warns of a potentially dangerous situation, which will lead to serious or fatal injuries, if not avoided.

CAUTION!

- warns of a potentially dangerous situation, which will lead to slight or minor injuries or material damage if not avoided.

ATTENTION!

...indicates a potentially dangerous situation, which can cause material damage, if not avoided.

...contains general notes and useful information.

...gives a reference to important information in other sections and documents.

2.

Some text passages serve a special purpose. These are highlighted as follows:

- Lists.

⇨ Instructional text, e.g. a series of activities.

3.

Meaning of directions:

If directions are given in the text (in front of, front, behind, rear, right, left), these directions relate to the normal direction of travel of the vehicle.

Contents

1 Safety

CAUTION!

Risk of injury the EasyPull is not operated correctly.

Therefore:

- It is imperative, that these Operating Instructions are read thoroughly before operating the EasyPull. Always follow the instructions and information therein, particularly the safety instructions.
- If these Operating Instructions or parts thereof are lost or become illegible, please request a new copy from the manufacturer.

Prerequisite to the safe handling and trouble-free operation of the EasyPull is a thorough knowledge of the applicable safety information and the safety regulations.

It is therefore imperative that this Chapter is read thoroughly before operating the EasyPull and that the instructions and warnings herein are strictly observed. The safety information and warnings, given at the appropriate places in the following Chapters, must also be strictly observed. The manufacturer will not be held responsible if safety information and warnings are not adhered to.

In addition to the information given in these Operating Instructions, local legislative regulations must be taken into consideration, in particular those regarding safety and accident prevention.

1.1 Proper Use

The operational reliability of the EasyPull is only guaranteed if it is put to proper use. It must therefore only be used for the purpose for which it is intended.

The EasyPull is only deemed to be in proper use when it is used to pull wheelchair-bound persons or unoccupied wheelchairs into vehicles that are specifically designed or converted to transport disabled persons. The vehicle must be fitted with an access ramp for this purpose. The EasyPull only secures the front of the wheelchair. For transportation, the wheelchair must be secured with additional belts at the rear. The passenger in the wheelchair must wear a safety belt.

Proper use also includes strict adherence to the information given in these Operating Instructions.

WARNING!

If the EasyPull is used for any other purpose than that described above, this may result in dangerous situations for persons or material damage being caused.

Therefore:

- Only use the EasyPull for the purpose for which it was intended.
- Always adhere to information given in these Operating Instructions.
- Do not use the EasyPull for any other purposes, particularly those given in Section 1.2. These are deemed to be improper use.

1.2 Improper Use

Any use other than that described in Section 1.1 is deemed to be improper use.

These include in particular:

- Pulling any objects other than wheelchair-bound persons or unoccupied wheelchairs.
- Allowing operation by incompetent persons.
- Making unauthorised modifications to the EasyPull.
- Operating the EasyPull when it has safety-relevant faults or is in a faulty condition.

1.3 Operator Requirements

The EasyPull must only be handled by persons who:

- have read and understood these Operating Instructions and
- have the technical knowledge to operate the wheel-chair's brakes.

Over and above this, the following applies if the EasyPull is used commercially or communally:

The EasyPull must only be operated by persons,

- who are of legal age,
- have been instructed in how to operate the EasyPull,
- who have been expressly designated to do so by the owner and
- who are in a position to adapt themselves to the particular behaviour and needs of disabled persons.

Transportation, installation, commissioning, maintenance, repair, fault finding and disposal of the EasyPull must only be carried out by persons with the corresponding technical training and experience.

1.4 Product Monitoring

Please contact AMF-Bruns GmbH & Co. KG immediately if faults or problems are encountered when operating the EasyPull or if accidents or "near-misses" occur.

AMF-Bruns will effect a solution to the problem with your help and the knowledge gained will flow into future projects.

NOTE

Guarantee work on the EasyPull must only be carried out with the prior agreement of AMF-Bruns GmbH & Co. KG.

The costs of such work will not be accepted by AMF-Bruns without prior agreement.

1.5 Safety and Accident Prevention Regulations

Adhere to the following notes in order to prevent personal injuries and material damage. For commercial use, also adhere also to the relevant safety and accident prevention regulations laid down by the trade associations.

- The EasyPull must only be used for the purpose for which it is intended, otherwise dangerous situations, with resultant injuries, may occur (Proper use: see Section 1.1, page 9).
- The owner is responsible for ensuring that proper use is adhered to, in particular that the EasyPull is only operated by authorised persons.
- If the EasyPull is used commercially or as a public utility, the owner must ensure that operating personnel are familiar with the operation of the EasyPull under all operating conditions by providing training courses.
- Proper use of the EasyPull also includes adherence to the specified maintenance and repair work, in particular strict adherence to the maintenance intervals. If such work is not carried out, trouble-free operation can not be guaranteed. There is a risk of personal injury and material damage being caused.
- The EasyPull must not be operated in a faulty condition, as serious injuries may be caused by this. If faults occur, do not use the EasyPull until repairs have been effected.
- Use only original spare parts and accessories approved of by the manufacturer. If other parts are used, the manufacturer will not accept liability for the consequences.

1.6 Disposal

When the EasyPull's useful life has expired, it must only be disposed of by qualified specialists. The manufacturer will accept no liability for damage caused by incorrect disposal.

2 Description

Wheelchairs are pulled into a vehicle by the EasyPull. To enable this, the vehicle must be equipped with an access ramp.

2.1 Layout and Function

The EasyPull comprises the following main components:

- Voltage transformer
- Control unit
- Winch with belts
- Remote control

2.1.1 Voltage transformer

The voltage transformer (see Figure 1) generates the power supply voltage (24 V DC) for the control system and winch from the vehicle's battery voltage. The primary and secondary sides of the voltage transformer are protected by fuses.

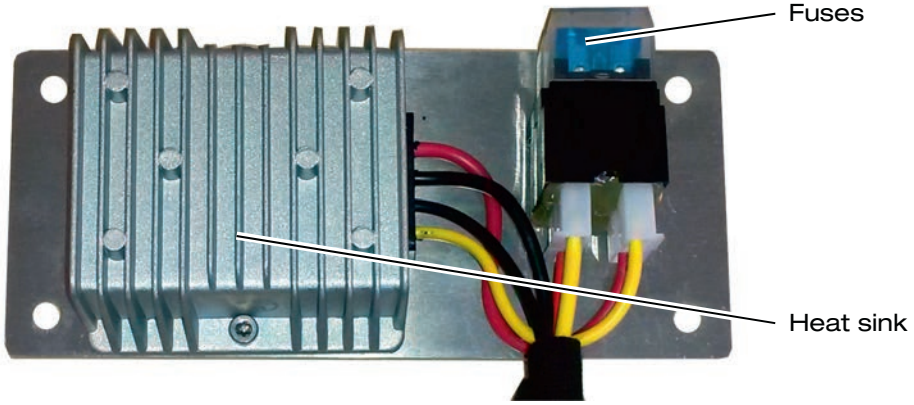

Figure 1: Voltage Transformer

2.1.2 Control unit

The control unit (see Figure 2) contains the receiver for the remote control and the electronics to control the winch. The door contact switch connected to the control unit switches the power supply to the EasyPull OFF when the tailgate / rear doors is / are closed and simultaneously resets the control unit. The LED's indicate the various operating statuses of the EasyPull.

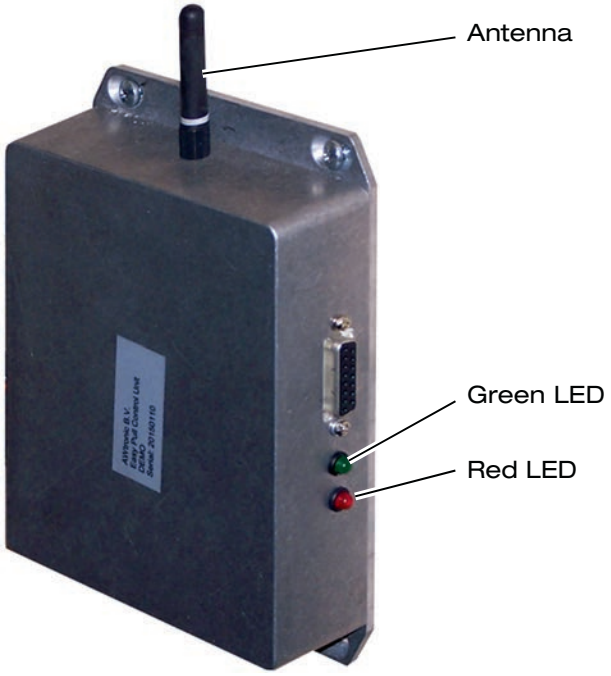

Figure 2: Control Unit

LED		Operating Status
green	**red**	
OFF	OFF	Tailgate / rear doors closed: EasyPull is switched OFF by the door contact switch.
ON	ON	Tailgate / rear doors open: belts reeled in (magnets switch the proximity sensors).
ON	OFF	Tailgate / rear doors open: belts reeled out (magnets do not switch the proximity sensors).
blinks	OFF	Belts are being reeled in or out.
All other statuses		Fault

2.1.3 Winch with belts

The winch (see Figure 3) pulls the wheelchair into the vehicle. It comprises the winch housing with the motor and interlocks. Two sensors in the winch housing signal the control unit when the adjustable magnets on the belts are in their proximity. As soon as at least one of the magnets is in the proximity of a sensor, the winch stops and the belts are latched in position. Each belt is equipped with a belt lock and a loop to attach it to the wheelchair.

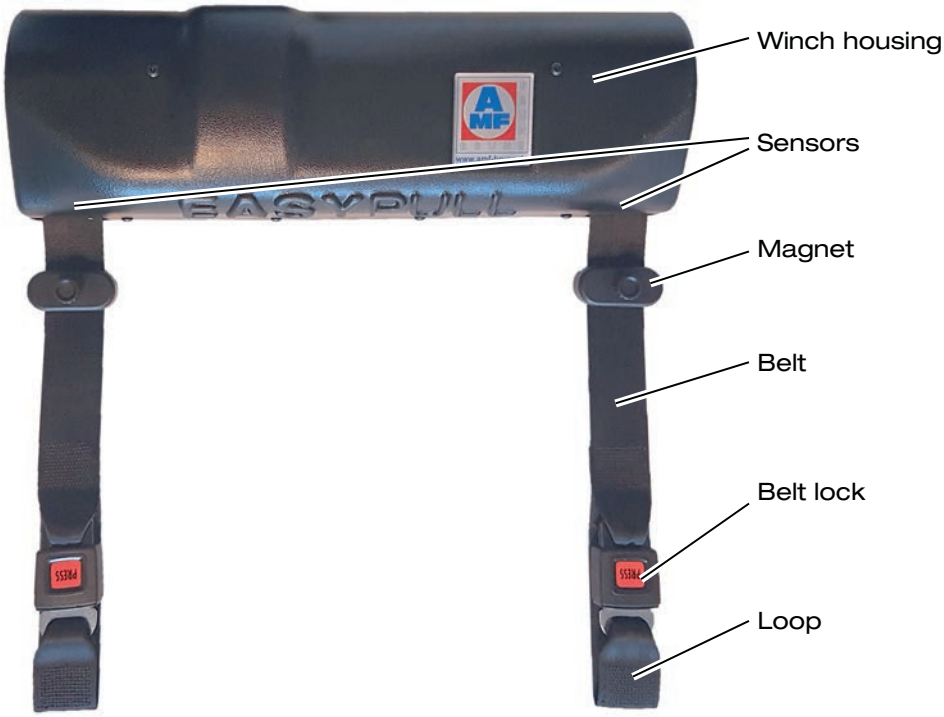

Figure 3: Winch with Belts

2.1.4 Remote control

The push-buttons on the remote control are used to control the EasyPull functions.

The red LED blinks whenever a push-button is pressed.

If the LED blinks without a push-button having been pressed, the battery must be replaced (see Section 9.1, page 41).

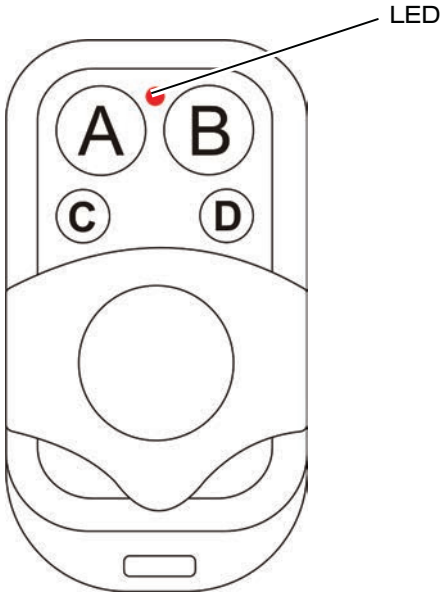

Figure 4: Remote control

Push-button	Function
A	Reels the belts out slowly.
B	Reels the belts in.
C	Reels the belts out quickly.
D	No function.

NOTE

The belts are not driven when they are reeled out. The belts reel out slowly or quickly by braking the winch to a greater or lesser extent. If necessary, the operator must pull the wheelchair out of the vehicle.

2.1.5 Rating Plates

A rating plate, which contains the fundamental data, is attached to the EasyPull (see Figure 5). The rating plate is attached to the motor.

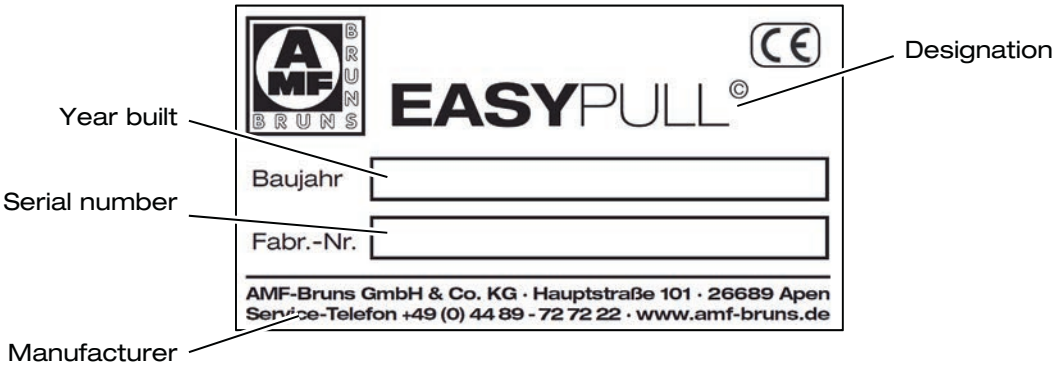

Figure 5: EasyPull Rating Plate

The remote control's rating plate is attached to the rear of the remote control (see Figure 6). It contains the type and serial numbers.

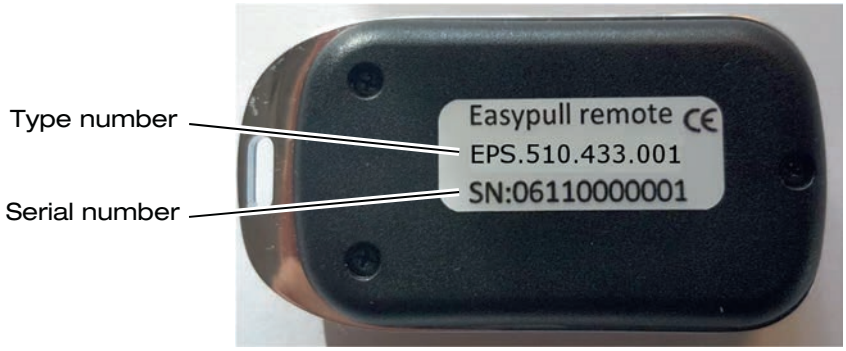

Figure 6: Remote Control Rating Plate

Type number	Meaning
EPS.510	Hardware type number
433	Frequency
01	Modification state (downwards compatible)

Serial number	Meaning
06	Year of production
11	Month of production
0000001	consecutive number

2.2 Technical Data

Designation		EasyPull
Dimensions:	Width	520 mm
	Depth	158 mm
	Height	110 mm
Connection voltage		12 V DC
Weight		approx. 16 kg
Current consumption		approx. 25 A
Pulling power		approx. 160 kg

Designation		Remote control
Voltage source		Button cell CR2032
Power supply voltage		1.8 to 3.3 V DC
Quiescent current		< 10 nA
Temperature range		-40 to + 85 °C
Transmission frequencies	Japan	426 MHz
	All other regions	433 MHZ

3 Shipping

The EasyPull is either shipped by the manufacturer or by a logistics company assigned by the manufacturer.

4 Installation

NOTE

The vehicle manufacturer's body fitting guidelines must be adhered to when installing the EasyPull.

The installation company itself is responsible for adherence to the safety regulations when installing the EasyPull.

Installation is insofar carried out at the sole risk installation company. The manufacturer will accept no liability whatsoever for damage caused during installation of the EasyPull. Unless such damage is caused by gross negligence or wilful violation of the contract on the part of the manufacturer.

In addition to the information given in these Installation Instructions, local legislative regulations must be taken into consideration, in particular those regarding safety and accident prevention.

The EasyPull must only be installed in vehicles with a 12 V DC electrical system

4.1 Safety Information for Installation

DANGER!

Risk of injury through incorrect installation.

A number of risks of personal injury and material damage can be caused if the EasyPull is incorrectly installed in the vehicle.

Such risks of danger can not only occur during installation but also as a result of installation not being carried out correctly.

Therefore:

- The EasyPull must only be installed in the vehicle by trained, specialist personnel.

DANGER!

Danger through screws becoming loose.

If screws / bolts are not tightened to the specified torque, they can become loose during operation of the EasyPull. This can result in accidents being caused.

Therefore:

- Tighten all fastening screws / bolts to the torque specified in Section 4.4, page 24.
- If any of the vehicle's original screws are loosened or removed for installation of the EasyPull, they must be re-tightened to the torque specified by the vehicle manufacturer.

DANGER!

Danger through incorrect installation of the power supply cable.

If the power supply cable is not installed correctly, there is a risk of fire. This can result in cause serious injuries to the passengers in the vehicle and material damage.

Therefore:

- Secure the cables adequately, such that they will not chafe at any point.
- Do not secure cables to the brake lines.

4.2 Fitting the Winch

- ⇨ Remove the winch housing (see Figure 3, page 14).
- ⇨ Place the winch in the position where it is to be installed.
- ⇨ Inspect the underside of the vehicle, to check whether the position in which the EasyPull is to be installed is suitable to bolt it to the floor of the vehicle and make a connection to the vehicle's chassis.

NOTE

The vehicle manufacturer's body fitting guidelines must be adhered to when installing the winch.

The fastening holes that will be drilled later must be positioned such that a positive, metal to metal connection to the vehicle's chassis can be made.

The fastening holes must not be positioned above cavities, beams, seams or similar parts. This must be ensured by the position of the EasyPull on the vehicle's floor. Otherwise the EasyPull can not be bolted down correctly.

- ⇨ Correct the position of the EasyPull if necessary.
- ⇨ Mark the position of the fastening holes.
- ⇨ Drill the Ø = 10.5 mm fastening holes.
- ⇨ Check once again that the position of the fastening holes for the EasyPull is suitable.
- ⇨ Deburr all holes.
- ⇨ Remove all drilling swarf, e. g. using a vacuum cleaner.
- ⇨ Remove underseal from the underside of the vehicle, at the points to which the EasyPull will be secured.
- ⇨ Apply rust-proofing paint to all bare metal surfaces.
- ⇨ Allow the rust-proofing paint to dry.
- ⇨ Bolt the EasyPull to the vehicle's floor and chassis.
- ⇨ Tighten the bolts to the torque specified in Section 4.4, page 24.

4.3 Installing and Connecting the Electrical System

The electrical system must be connected in accordance with the electrical circuit diagram (see Chapter 11, page 45).

4.3.1 Fitting the voltage transformer

- ⇨ Disconnect the cable from the negative pole of the starter battery.
- ⇨ Fit the voltage transformer (see Figure 7).
- ⇨ Connect the red 12 V cable to the positive pole of the starter battery.
- ⇨ Connect the black 12 V cable to an earth connection, e.g. the bodywork or chassis.

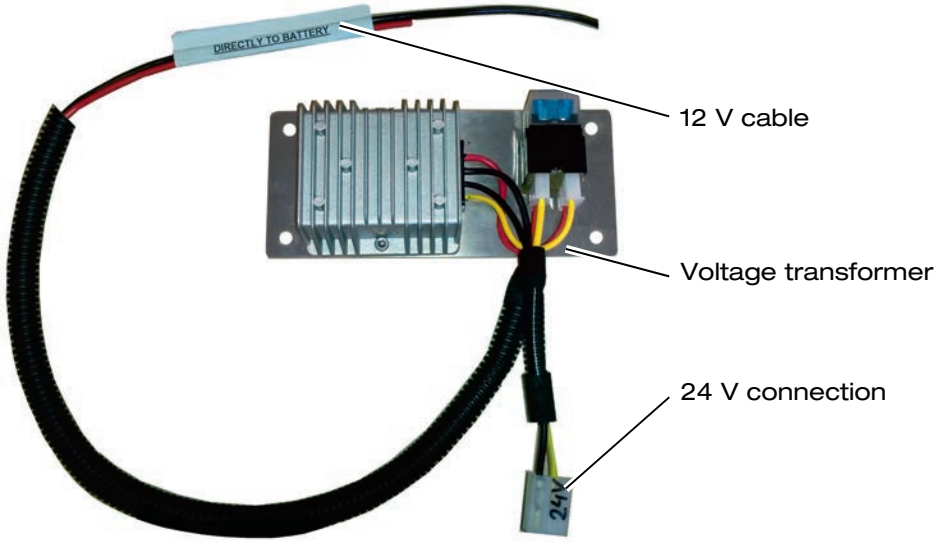

Figure 7: Voltage Transformer, Complete

4.3.2 Fitting the control unit

- ⇨ Fit the control unit behind on of the side claddings at the rear of the vehicle (see Figure 2, page 13).

NOTE

The position in which the control unit is fitted must be close enough to the winch that the winch can be connected to it using the connection cable provided on the control unit.

4.3.3 Laying the extension cable (optional)

⇨ If necessary, lay the extension cable provided between the voltage transformer and the control unit (see Figure 8).

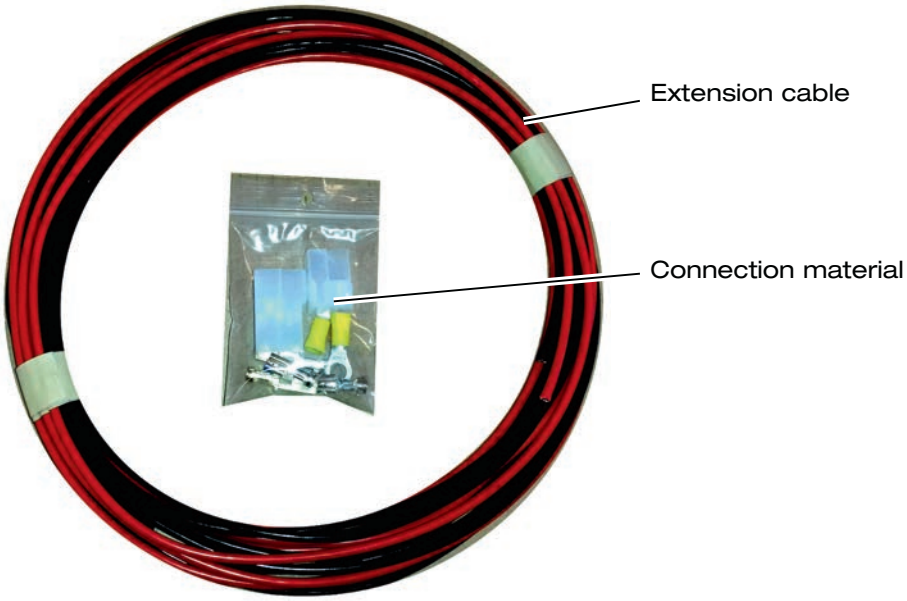

Figure 8: Extension Cable

4.3.4 Laying the connection cable

⇨ Lay the connection cable from the control unit to the winch (see Figure 9).

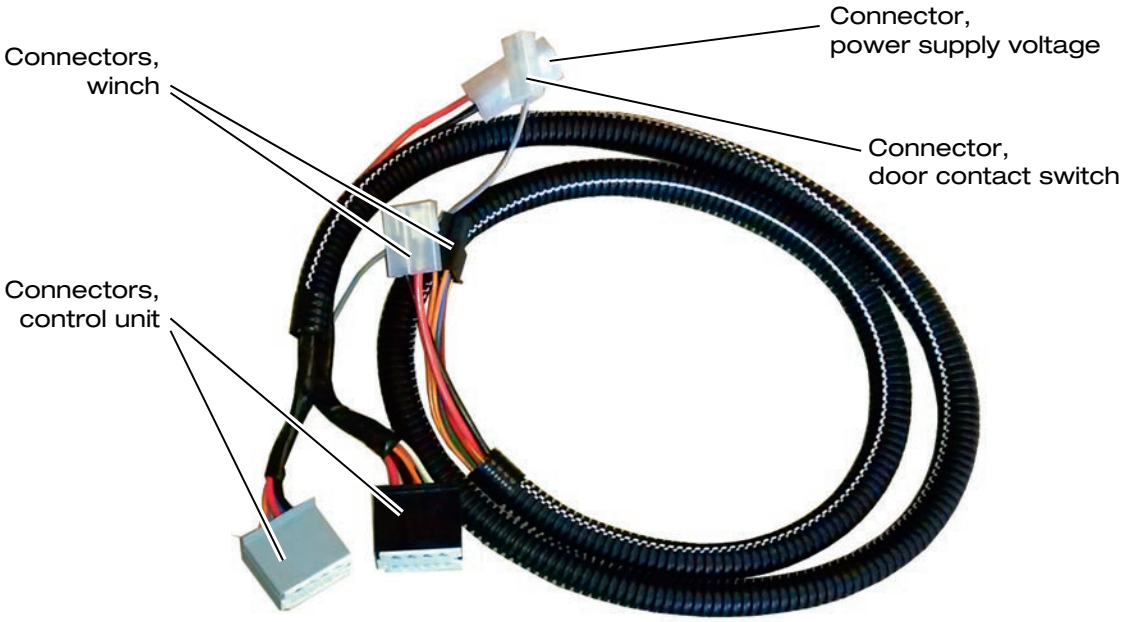

Figure 9: Connection Cable

4.3.5 Fitting the door contact switch

⇨ Fit the door contact switch such that it is operated when the rear doors / tailgate are / is closed.

4.3.6 Making the connections

⇨ Connect the connection cable to the control unit (see Figure 10).

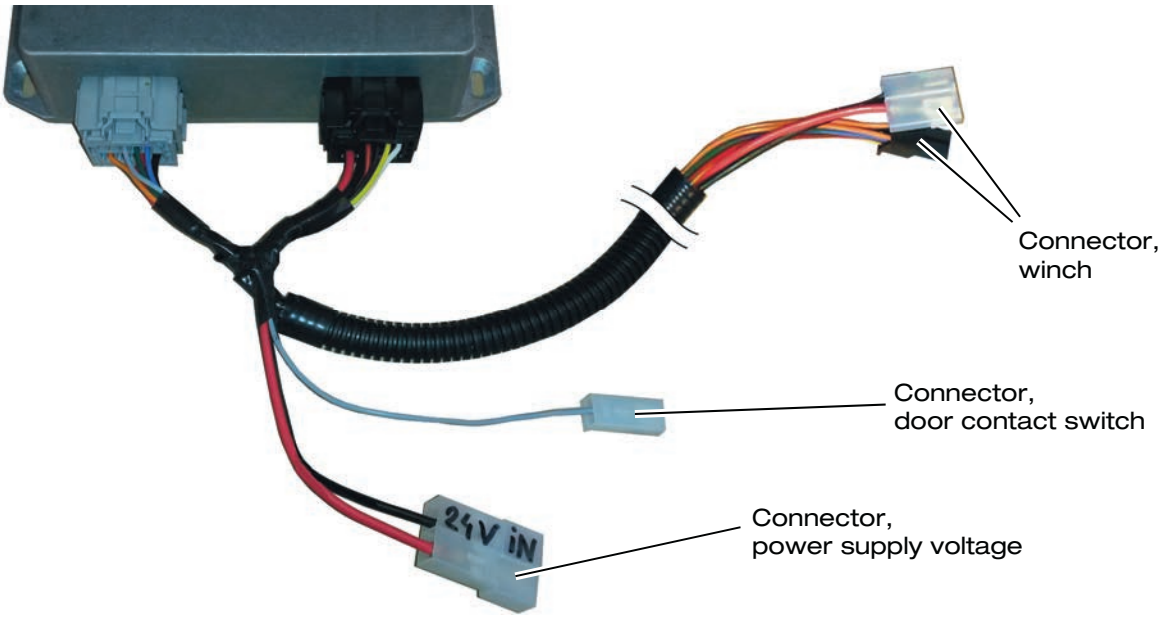

Figure 10: Connecting the Control Unit

⇨ Connect the connection cable to the winch (see Figure 11).

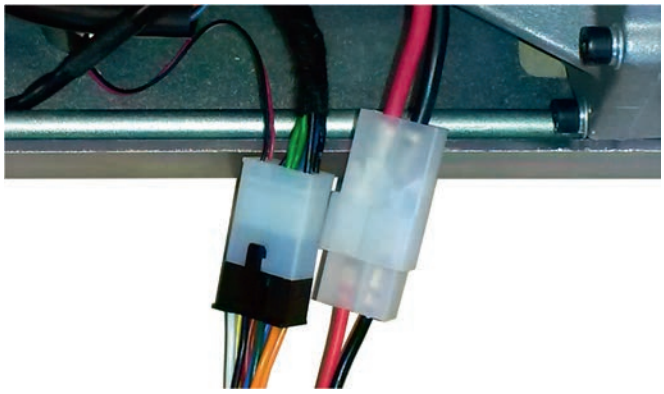

Figure 11: Connecting the Winch

⇨ Fit the winch housing.

⇨ Connect the power supply connector to the voltage transformer (see Figure 12).
If necessary, use the extension cable provided to do this (see Figure 8, page 22).

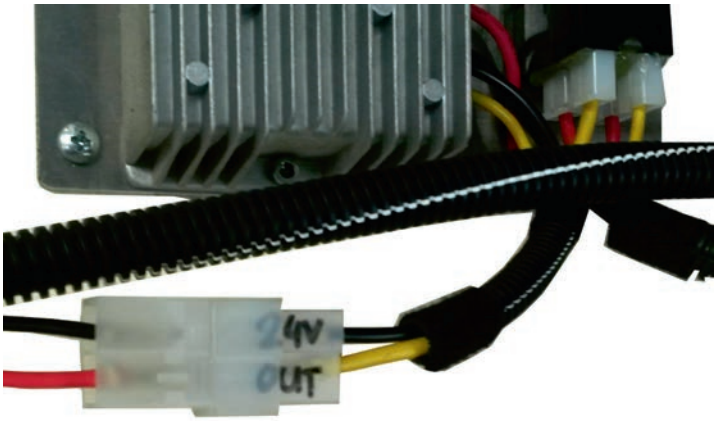

Figure 12: Connecting the Voltage Transformer

⇨ Connect the connection cable to the door contact switch (see Figure 10, page 23).

⇨ Re-connect the cable to the negative pole of the starter battery.

The green LED on the control unit lights up.

The EasyPull is ready for operation.

4.4 Tightening Torques

Standard Threaded Steel Screws

Property Class	8.8	10.9
M8	25 Nm	36 Nm
M10	50 Nm	72 Nm
M12	85 Nm	125 Nm

4.5 Carrying Out a Trial Run

⇨ Adjust the magnets, such that they make contact with the winch housing (see Figure 17, page 29).

The red LED on the control unit lights up.

⇨ Press and hold push-button “A” on the remote control to reel the belts out slowly or press and hold push-button “C” to reel the belts out quickly.

A continuous beep signalises that the magnets are in the vicinity of the sensors.

⇨ Pull the belts out of the vehicle

An intermittent beep sounds as soon as both magnets have left the vicinity of the sensors.

⇨ Release the push-button.

The beeping sound stops.

⇨ Adjust both magnets, such that they are as close to the belt locks as possible (see Figure 13).

Figure 13: Magnet Close to the Lock

⇨ Press and hold push-button “B” on the remote control.

An intermittent beep sounds.

The EasyPull reels the belts into the vehicle.

⇨ Keep hold of the belts and guide them whilst they are being reeled in.

⇨ Make certain that the belts are not twisted.

The winch stops and the latch is applied when at least one magnet reaches the winch housing.

A continuous beep sounds.

⇨ Release push-button “B”.

The beeping sound stops.

⇨ Fit the side cladding.

5 Commissioning

Adjusting the EasyPull

It is necessary to adjust the EasyPull in order to adapt it to the wheelchair in use. Only when the EasyPull is correctly adjusted will it stop, latch automatically when the wheelchair has reached its position in the rear of the vehicle in which it can be secured using the existing rear belts.

WARNING!

Risk of injury if the EasyPull is incorrectly adjusted.

If the EasyPull is not adjusted correctly, the winch will not latch in position. The wheelchair can roll backwards out of control.

Therefore:

- Adjust the EasyPull to suit the wheelchair to be transported the first time it is used.
- Re-adjust the EasyPull every time a different wheelchair is to be transported.

5.1 Initial Setting

⇨ Apply the vehicle's handbrake.

⇨ Remove the ignition key.

⇨ Open the rear doors / tailgate

⇨ Fold the access ramp out.

⇨ Accompany the occupied or unoccupied wheelchair to the bottom of the access ramp.

⇨ Apply the wheelchair's brakes.

⇨ Take the EasyPull belts up with one hand.

⇨ Press and hold push-button “A” on the remote control to reel the belts out slowly or press and hold push-button “C” to reel the belts out quickly.

A beep sounds.

⇨ Pull the electrically operated belts out to the wheelchair.

⇨ Release the push-button.

The beeping sound stops.

- ⇨ Attach the belts to the front hitching point adapters on the wheelchair (see Figure 14). Use the belt loops if no hitching point adapters are available (see Figure 15).
- ⇨ Make certain that the belts are not twisted.

Figure 14: Fastening to the Hitching Point Adapters

Figure 15: Fastening by Means of the Loops

- ⇨ Loosen the magnets by turning the locking screws in an anti-clockwise direction (see Figure 16).
- ⇨ Move the magnets as close to the wheelchair as possible.
- ⇨ Secure the magnets by turning the locking screws in a clockwise direction.

Figure 16: Adjusting the Magnets

- ⇨ Release the wheelchair's brakes.
- ⇨ Take up a position behind the wheelchair and keep a firm hold of it.
- ⇨ Press and hold push-button “B” on the remote control.

An intermittent beep sounds.

The EasyPull pulls the wheelchair into the vehicle.

- ⇨ Guide the wheelchair whilst it is being pulled into the rear of the vehicle.

When the wheelchair has reached the position in the vehicle in which it can be secured using the existing rear belts:

- ⇨ Release push-button “B”.

The beeping sound stops.

- ⇨ Apply the wheelchair's brakes.
- ⇨ Adjust the magnets, such that they make contact with the winch housing (see Figure 17, page 29).

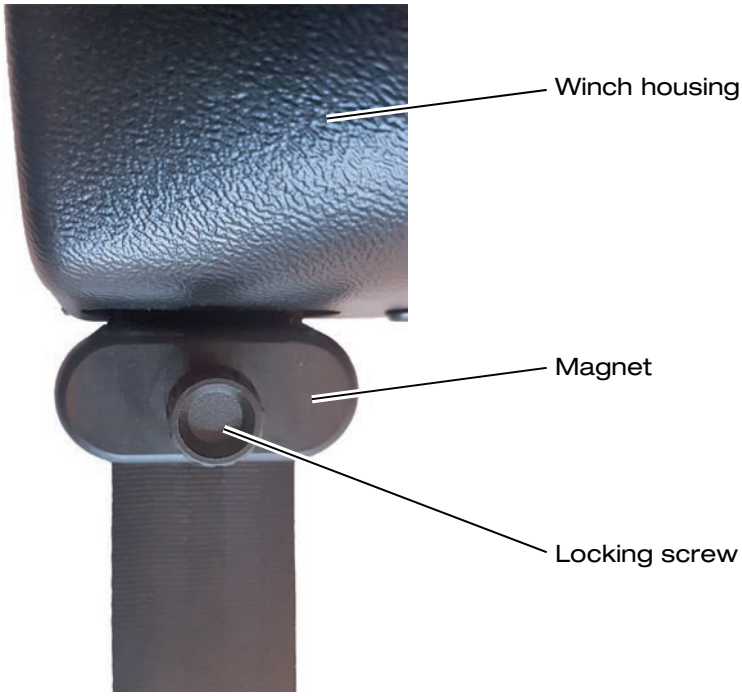

Figure 17: Magnet in Contact with the Winch Housing

5.2 Checking the Setting

⇨ Press and hold push-button “A” on the remote control.

A beep sounds.

⇨ Release the wheelchair's brakes.

⇨ Take up a position behind the wheelchair and keep a firm hold of it.

⇨ Pull the wheelchair out of the vehicle by approx. 1 m.

⇨ Release push-button “A”.

The beeping sound stops.

⇨ Press and hold push-button “B” on the remote control.

An intermittent beep sounds.

The EasyPull pulls the wheelchair back into the vehicle.

⇨ Hold and guide the wheelchair whilst it is being pulled into the rear of the vehicle.

The EasyPull stops as soon as at least one magnet is in the proximity of the winch housing.

A continuous beep sounds.

⇨ Release push-button “B”.

The beeping sound stops.

The wheelchair must now be in its foreseen position.

Finely adjust the magnets if this is not the case (see Section 5.3).

The EasyPull is correctly adjusted when the wheelchair has reached the position in the vehicle in which it can be secured using the existing rear belts.

- ⇨ Apply the wheelchair's brakes.
- ⇨ Secure the rear of the wheelchair with the belt systems provided in the vehicle.
- ⇨ If the wheelchair is occupied by a passenger: Secure the passenger with a seat belt.
- ⇨ Fold the access ramp up.
- ⇨ Close the rear doors / tailgate

5.3 Fine Adjustment

- ⇨ Adjust both magnets, such that they are approx. 3 cm from the winch housing (see Figure 18).

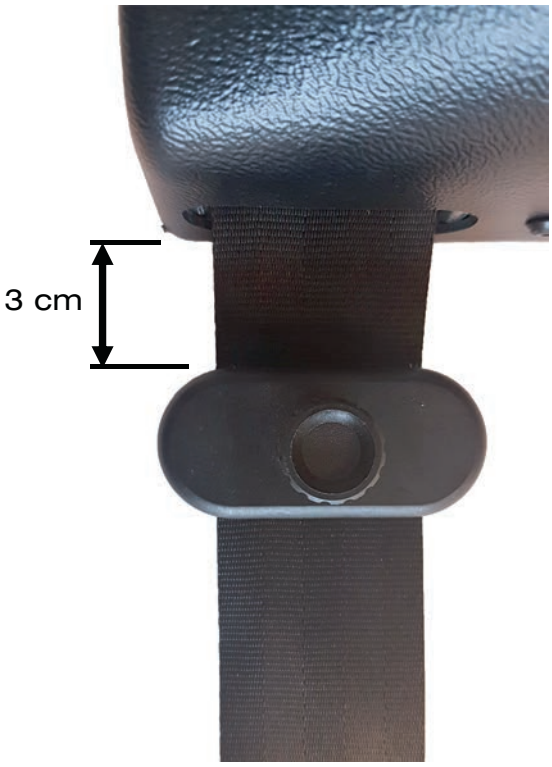

Figure 18: Fine Adjustment

- ⇨ Check the adjustment once again (see Section 5.2, page 29).

6 Operation

6.1 Safety Regulations for Operation

Before operating the EasyPull, the safety information must have been read (see Chapter 1, page 8).

WARNING!

Risk of injury and material damage if the EasyPull is operated in a faulty condition.

Therefore:

- Always visually inspect the EasyPull for outward signs of damage before use.

WARNING!

Risk of injury if the wheelchair and/or passenger are not secured correctly.

If the passenger and wheelchair are not secured correctly they can suffer severe injury or damage if the brakes are applied sharply or if the vehicle is involved in even a minor road traffic collision.

Therefore:

- Secure the rear of the wheelchair with the belt systems provided in the vehicle.
- Secure the passenger with the safety belt systems provided in the vehicle.

CAUTION!

Risk of injury to the passenger through the belt fastening loops.

If the belts are secured to the wheelchair by means of the fastening loops, there is a risk of the passenger reaching into the loops. This presents a risk of crushing when the belts are reeled in.

Therefore:

- Make sure that the passenger does not reach into the fastening loops.

6.2 Loading an Occupied or Unoccupied Wheelchair

NOTE

If you are using the EasyPull for the first time or if a different wheelchair than that which was previously transported is used:

Make adjustments to the EasyPull (see Chapter 5, page 26).

WARNING!

Risk of injury or material damage when loading an occupied or unoccupied wheelchair.

When an occupied or unoccupied wheelchair is pulled into the vehicle, uncontrolled movements of the wheelchair can cause injuries and material damage.

Therefore:

- Guide the occupied or unoccupied wheelchair up to its final position by hand whilst it is being pulled into the vehicle.

⇨ Apply the vehicle's handbrake.

⇨ Remove the ignition key.

⇨ Open the rear doors / tailgate

⇨ Fold the access ramp out.

⇨ Accompany the occupied or unoccupied wheelchair to the bottom of the access ramp.

⇨ Apply the wheelchair's brakes.

⇨ Take the EasyPull belts up with one hand.

⇨ Press and hold push-button “A” on the remote control to reel the belts out slowly or press and hold push-button “C” to reel the belts out quickly.

A beep sounds.

⇨ Pull the electrically operated belts out to the wheelchair.

⇨ Release the push-button.

The beeping sound stops.

⇨ Attach the belts to the front hitching point adapters on the wheelchair (see Figure 14, page 27). Use the belt loops if no hitching point adapters are available (see Figure 15, page 27).

⇨ Make certain that the belts are not twisted.

⇨ Release the wheelchair's brakes.

⇨ Take up a position behind the wheelchair and keep a firm hold of it.

⇨ Press and hold push-button “B” on the remote control.

An intermittent beep sounds.

The EasyPull pulls the wheelchair into the vehicle.

⇨ Guide the wheelchair whilst it is being pulled into the rear of the vehicle.

When the wheelchair has reached its foreseen position in the vehicle, the EasyPull will stop and the latch will be applied to the winch.

A continuous beep sounds.

⇨ Release push-button “B”.

The beeping sound stops.

⇨ Apply the wheelchair's brakes.

⇨ Secure the rear of the wheelchair with the belt systems provided in the vehicle.

If the wheelchair is occupied by a passenger:

⇨ Secure the passenger with a seat belt.

⇨ Fold the access ramp up.

⇨ Close the rear doors / tailgate

WARNING!

Risk of injury if the winch is not latched in position.

If the EasyPull’s winch is not latched in position the wheelchair can roll backwards out of control. The passenger in the wheelchair can suffer injury.

Therefore:

- Always make certain that the EasyPull is latched in position before driving off.

6.3 Unloading an Occupied or Unoccupied Wheelchair

WARNING!

Risk of injury or material damage when unloading an occupied or unoccupied wheelchair.

When unloading an occupied or unoccupied wheelchair, personal injuries and material damage can be caused if the wheelchair rolls backwards out of control.

Therefore:

- When unloading an occupied or unoccupied wheelchair, always guide the wheelchair by hand until it has reached its final position.

NOTE

The belts are not driven when they are reeled out. The belts reel out slowly or quickly by braking the winch to a greater or lesser extent. If necessary, the operator must pull the wheelchair out of the vehicle.

⇨ Apply the vehicle's handbrake.

⇨ Remove the ignition key.

⇨ Open the rear doors / tailgate

⇨ Fold the access ramp out.

⇨ Release the passenger’s seat belt.

⇨ Detach and remove the rear belts securing the rear of the wheelchair.

⇨ Release the wheelchair's brakes.

⇨ Take up a position behind the wheelchair and keep a firm hold of it.

⇨ Press and hold push-button “A” or “C” on the remote control.

A beep sounds.

⇨ Accompany the passenger / wheelchair out of the vehicle.

⇨ Remain in position behind the wheelchair until it has left the access ramp completely.

⇨ Release the push-button.

The beeping sound stops.

⇨ Apply the wheelchair's brakes.

- ⇨ Detach the EasyPull belts from the wheelchair.
- ⇨ Hold the belts up with one hand.
- ⇨ Press and hold push-button “B” on the remote control.

An intermittent beep sounds.

The EasyPull reels the belts into the vehicle.

- ⇨ Keep hold of the belts and guide them whilst they are being reeled in.
- ⇨ Make certain that the belts are not twisted.

The winch stops and the latch is applied when at least one magnet reaches the winch housing.

A continuous beep sounds.

- ⇨ Release push-button “B”.

The beeping sound stops.

- ⇨ Fold the access ramp up.
- ⇨ Close the rear doors / tailgate

7 Maintenance and Repair

7.1 Safety Regulations for Maintenance and Repair

Read the safety information before carrying out maintenance and repair work (see Chapter 1, page 8).

WARNING!

There is a risk of injury if the EasyPull is used after it has been involved in an accident.

The EasyPull can suffer damage, which is not immediately evident, if involved in an accident. This can adversely affect the safety of the passenger in the wheelchair.

Therefore:

- The EasyPull must be replaced if it is involved in an accident.
- If in doubt, contact the customer service department for advice on whether it is safe to use the EasyPull if it was only involved in a minor accident (see Chapter 12, page 47).

WARNING!

Risk of injury and material damage if maintenance and repair work is not carried out correctly.

Therefore:

- Only allow specialist personnel to carry out maintenance and repair work.

WARNING!

Personal injury and material damage can be caused by using inferior quality spare parts.

The manufacturer will accept no liability whatsoever for damage or injury caused by the use of non-original spare parts or spare parts that have not been approved of by the manufacturer.

Therefore:

- Use only original spare parts or spare parts that have been approved of by the manufacturer.

7.2 Routine Maintenance Work

Maintenance tasks to be carried out on a regular basis are listed in the following maintenance schedule.

Contact the customer service department for maintenance work that must be carried out by a specialist (see Chapter 12, page 47).

7.2.1 Maintenance schedule

Interval	Work to be Carried Out
Before use	Carry out a visual inspection for damage and deficiencies. Initiate repairs if necessary.
	Listen for unusual noises when operating the EasyPull. Initiate repair work if necessary.
Daily	Check tighten the magnet locking screws by turning them in a clockwise direction (see Figure 17, page 29).
	Before the wheelchair is secured in the vehicle by means of the rear belts, check the function of the latching system by pulling the wheelchair backwards. If the latching system does not function, initiate repairs.
	Check the function of the door contact switch. Initiate repairs if defective.
Yearly	Check tighten all fastening screws and bolts.

7.2.2 Maintenance records

Enter maintenance and repair work that has been carried out into the maintenance record provided for this purpose (see Section 7.3, page 38). This helps in keeping track of routine maintenance activities.

For records of maintenance work over and above this, it is recommended that you keep your own lists.

7.3 Maintenance and Repair Record

Maintenance Work Carried Out		
Date	Signature	Remarks / Work Done

8 Decommissioning and Conservation

For queries regarding de-commissioning and conservation, contact our customer services department (see Chapter 12, page 47).

9 Faults and Troubleshooting

WARNING!

Risk of injury and material damage if repair work is carried out incorrectly.

Therefore:

- Only allow specialist personnel to carry out repair work.

If faults occur when operating the EasyPull, proceed as described in the following troubleshooting table. Contact the customer service department if faults are encountered which cannot be remedied using the information and measures given in the table.

Fault	(possible) Cause	Remedial measures
The EasyPull does not stop and latch automatically.	The EasyPull is not adjusted correctly.	Carry out adjustment of the EasyPull (see Chapter 5, page 26).
The EasyPull belts can not be reeled out even though the latching system release signal has been given.	Latching system defective.	Do not use the EasyPull. Initiate repairs.
The EasyPull makes noises when driving.	The EasyPull fastening has become loose.	Check tighten all fastening bolts.
The EasyPull remains latched, even though push-button “A” or “C” on the remote control has been pressed.	The magnets are not in the proximity of the sensors.	Press push-button “B” on the remote control until the continuous beep signalises that at least one magnet is in the vicinity of the sensors.

Fault	(possible) Cause	Remedial measures
The EasyPull is interfered with by another remote control.	The other remote control uses partially the same coding as the EasyPull remote control.	Change the programming of the remote control. Contact the customer service department for this (see Chapter 12, page 47).
The EasyPull does not function.	The control unit does not function correctly.	Carry out a reset: Operated the door contact switch by hand or open the rear doors / tailgate and close them / it again.
	The LED blinks on the remote control without a push-button having been pressed. The remote control battery is discharged.	Fit a new battery (see Section 9.1, page 41).
	The remote control battery is discharged.	Fit a new battery (see Section 9.1, page 41).
	The remote control is defective.	Purchase a new remote control. Configure the new remote control (see Section 9.2, page 42).
	A fuse has blown in the voltage transformer.	Fit a new fuse.
	The vehicle's starter battery is discharged.	Charge the starter battery or fit a new battery.
	The door contact switch is defective.	Contact the customer service department (see Chapter 12, page 47).
	The voltage transformer is defective.	
	The control unit is defective.	

9.1 Fitting a New Battery

- ⇨ Remove the three screws from the rear side of the remote control.
- ⇨ Remove the rear cover and frame from the remote control.
- ⇨ Remove the old battery.
- ⇨ Fit the new battery: button cell, type CR2032.
  The positive pole of the battery must be on top (see Figure 19).

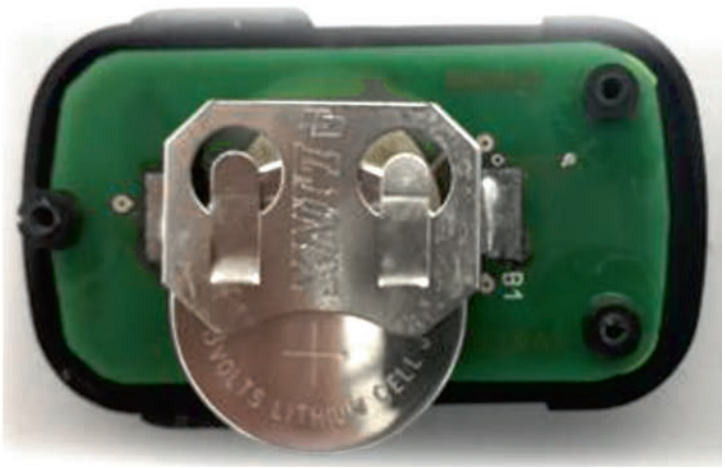

Figure 19: Fitting a Battery

- ⇨ Fit the remote control's rear cover and replace the screws.
- ⇨ Test the function of the remote control.
  Do this by pressing random push-buttons on the remote control several times. The red LED in the remote control must light up whenever a push-button is pressed.

9.2 Configuring a New Remote Control

- ⇨ Open the rear doors / tailgate
- ⇨ Fold the access ramp out.
- ⇨ Remove the cladding, behind which the control unit is installed.
- ⇨ Remove the cap from the configuration button on the control unit (see Figure 20 and Figure 21).

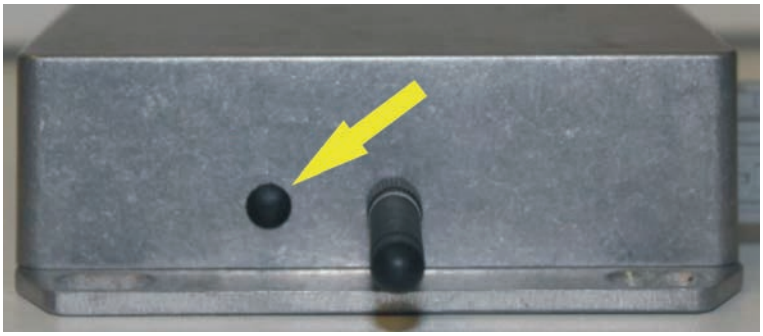

Figure 20: Removing the Cap (1)

Figure 21: Removing the Cap (2)

- ⇨ Press the configuration button and hold it pressed (see Figure 22).

Figure 22: Pressing the Configuration Button

The green LED on the rear of the control unit blinks quickly, the red LED blinks slowly (see Figure 23).

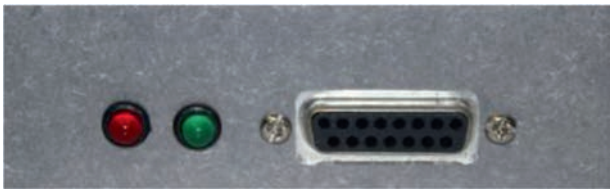

Figure 23: LED's on the Control Unit

- ⇨ Press push-button "B" on the remote control for at least 2 seconds until the green LED lights continuously and the red LED blinks slowly.
- ⇨ Press push-button "A" on the remote control until both LED's blink slowly and synchronously.
- ⇨ Test the correct function of the remote control.
- ⇨ If necessary, repeat the configuration procedure.

10 Spare Parts

Figure	Designation	Article No.
	Remote control	10022151
	Cover	10022145
	Control unit	10022150
	Voltage transformer	10022152

11 Electrical Circuit Diagrams

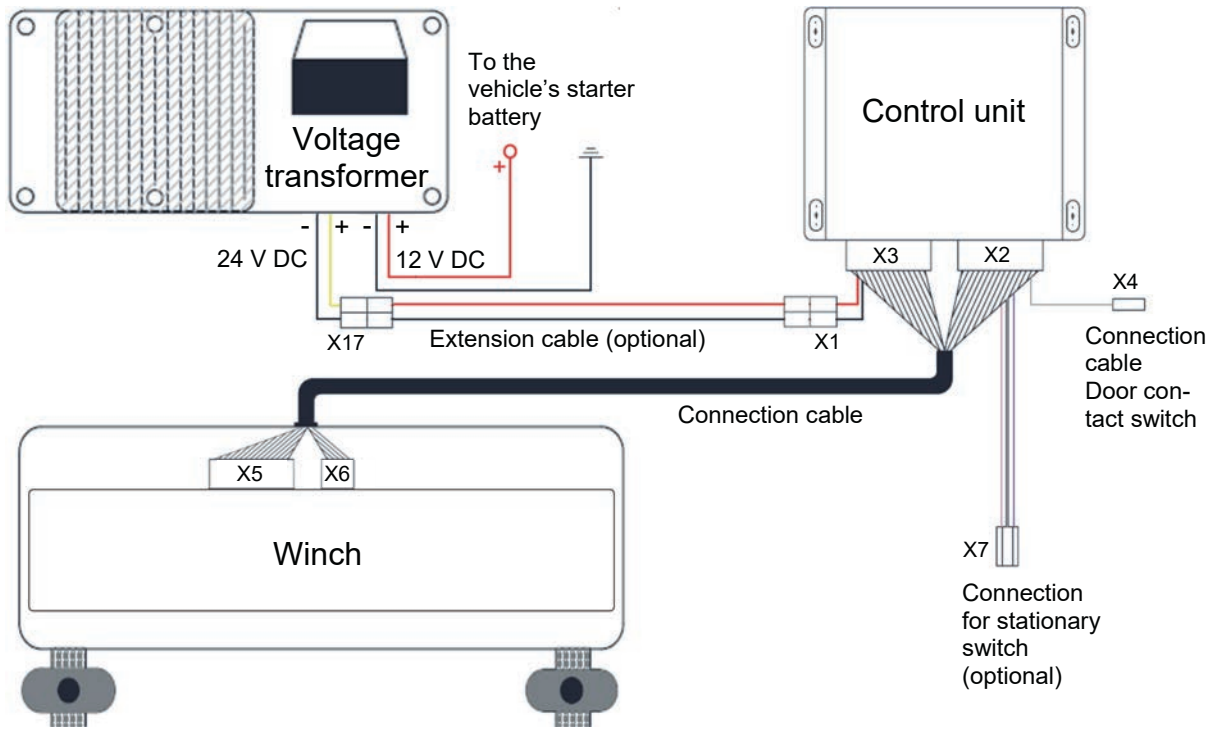

Figure 24: Block Diagram

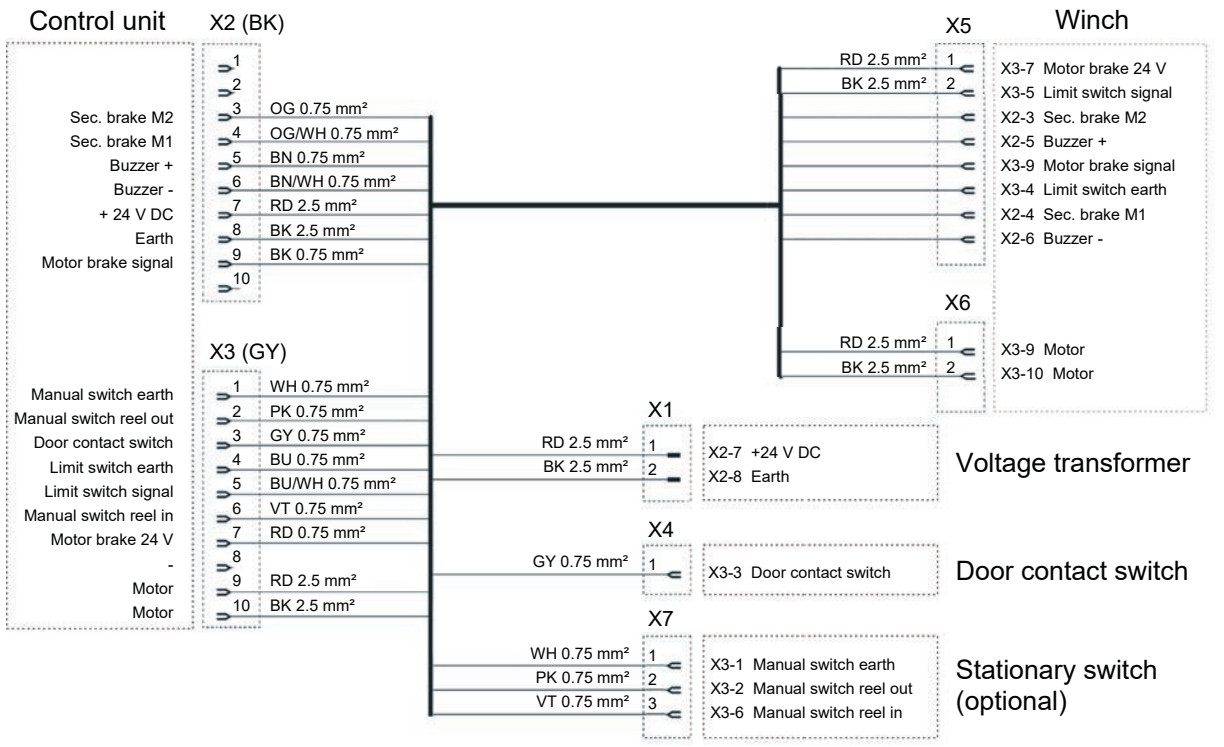

Figure 25: Electrical Circuit Diagram, Connection Cable

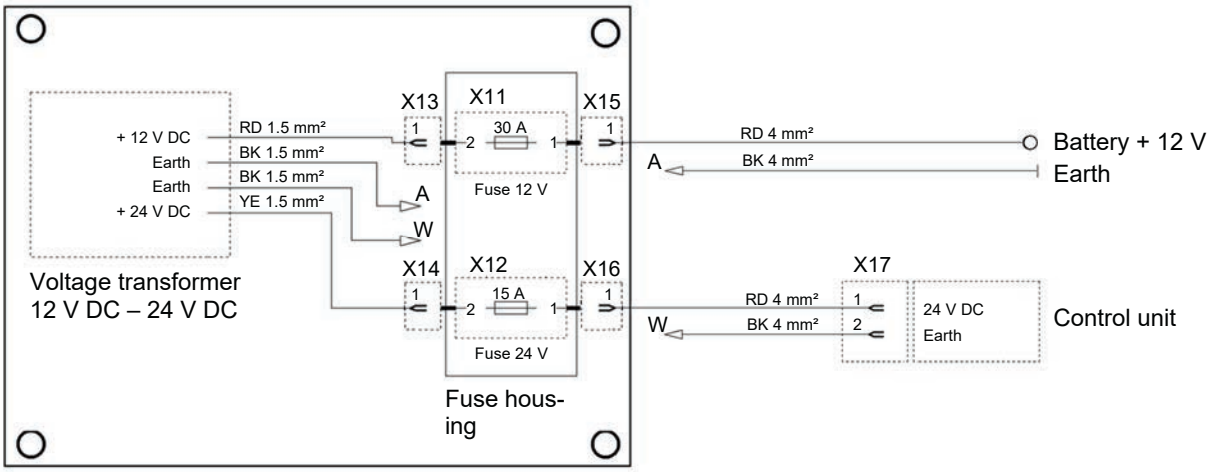

Figure 26: Electrical Circuit Diagram, Voltage Transformer

Colour	**Abbreviation** (acc. to IEC 60757)
Black	BK
Brown	BN
Red	RD
Orange	OG
Yellow	YE
Green	GN

Colour	**Abbreviation** (acc. to IEC 60757)
Blue	BU
Violet	VT
Grey	GY
White	WH
Pink	PK
Turquoise	TQ

12 Customer Service

The AMF-Bruns customer service department will be more than pleased to assist in ordering spare parts, maintenance and repair work and help with general problems or queries.

The address is:

AMF-Bruns GmbH & Co. KG

Hauptstraße 101

D – 26689 Apen

Tel.: +49 (0) 44 89 / 72 72-22

Fax: +49 (0) 44 89 / 62 45

service.hubmatik@amf-bruns.de

www.amf-bruns.de

NOTE

Guarantee work on the EasyPull must only be carried out with the prior agreement of AMF-Bruns GmbH & Co. KG.

The costs of such work will not be accepted by AMF-Bruns without prior agreement.

13 Declaration of Conformity

EC Declaration of Conformity

according to EC Machine Directive 2006/42/EC, Annex II A

We, the manufacturer, hereby declare, that the design and construction of the machine designated below complies with the fundamental health and safety requirements of the EC Machinery Directive 2006/42/EC. This declaration is rendered null and void if unauthorised modifications are made to the machine.

Designation **Wheelchair Winch**

Type: **EasyPull**

Manufacturer:

Company: **AMF-Bruns GmbH & Co. KG**

Address: **Hauptstraße 101**

26689 Apen

Harmonised standards applied:

DIN EN 1756-2, DIN EN ISO 12100

Other technical standards and specifications applied:

DIN 32983, DIN 75078-1, BGR 500

Conformation with the following directives applicable to the machine is declared:

EMC Directive 2014/30/EU

Authorised representative for the technical documentation:

Thomas Lakewand (address: see manufacturer's address)

Apen, 08.08.2016		Gerit Bruns, managing director
Place, date	Signature	Details of the signee

AMF-Bruns GmbH & Co. KG | Hauptstraße 101 | 26689 Apen
Telephone +49 (0) 4489 / 72 72 22 | Fax +49 (0) 4489 / 62 45
service.hubmatik@amf-bruns.de

www.amf-bruns.de

Zertifiziertes Management-System
ZDH ZERT
DIN EN ISO 9001
Reg.-No. Q1 0105027